Spiral Cam Lever

Steel

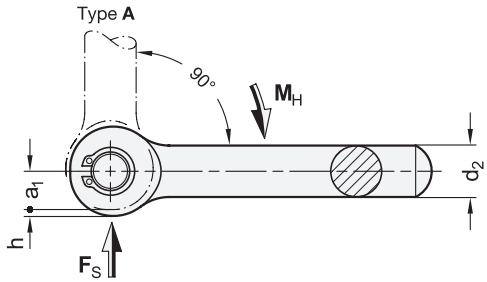

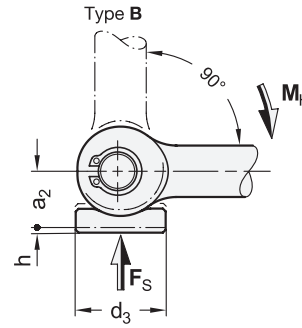

3 Type

A Without contact plate
B With contact plate

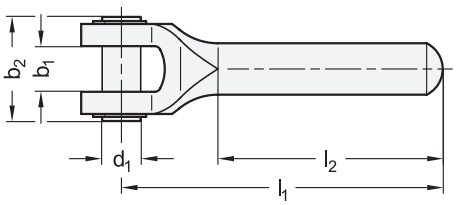

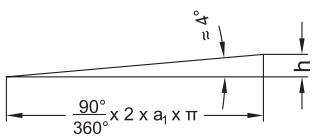

Application example

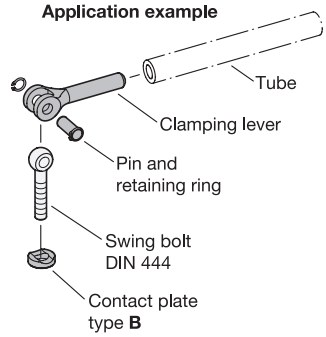

1 l_1	2 d_1 f8	a_1 ≈	a_2 ≈	b_1 +0,2	b_2	d_2	d_3	h ≈ Stroke	l_2 ≈	F_S in kN ≈ Clamping force	M_H in Nm ≈ Torque
64	8	9	12,3	9,2	24	10	20	1	41	7,5	25
80	10	10	14,2	12,2	28	12	24	1,1	54	12	45
100	12	12,5	17,7	14,2	33	16	28	1,4	70	18	80
125	16	16	22,5	17,2	41	20	36	1,7	88	34	200

Specification

4

Lever
Steel
• Case-hardened
• Blackened ● **BT**

Pin
Steel
Case-hardened

Contact plate
Steel
Case-hardened

Retaining rings DIN 471
Steel

RoHS

Spiral cam levers GN 9027 are used to quickly clamp fixture and machine components with high clamping forces, independent of the direction of the lever. The pitch of the double-sided clamping spiral creates a self-locking effect.
Due to the robust design, the lever can be extended by attaching a tube or brought into the desired clamping position by using a soft-face hammer. No torque is applied to the clamping screw or the clamping point during the clamping operation.
When combined with swing bolts DIN 444 / GN 1524, the spiral cam levers are suitable for many different applications. The contact plate of type B prevents damage to the clamping surface. The clamping mechanism can be lubricated for easier operation.

Technical Information	Page
ISO Fundamental Tolerances	QVX

Accessory	
DIN 444 Swing Bolts	QVX

How to order

1 2 3 4
GN 9027-125-16-A-BT

1	l_1
2	d_1
3	Type
4	Finish